REV.	ECN. NO.	MODIFY. CONTENT
A		NEW

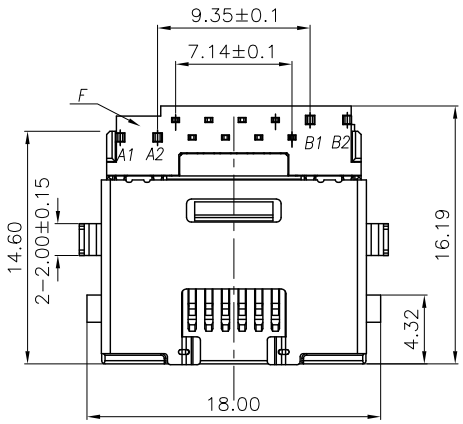

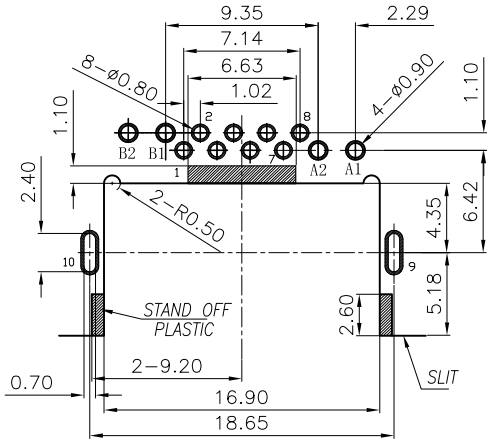

RECOMENDED PCB LAYOUT
TOP VIEW: TOL.±0.05mm

SPECIFICATIONS:

1. VOLTAGE RATING: 150 VAC MAX.
2. CURRENT RATING: 1.5 AMP MAX.
3. INSULATION RESISTANCE: 500M OHMS MIN. AT 500 VDC.
4. DIELECTRIC WITHSTANDING VOLTAGE: 500 VAC 60Hz 1 MINUTE.
5. DURABILITY: 5000 CYCLES .
6. OPERATING TEMPERATURE: -30°C TO +70°C.

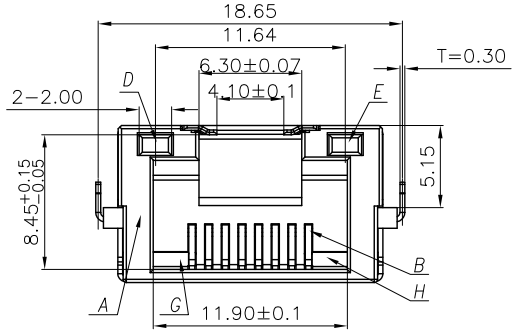

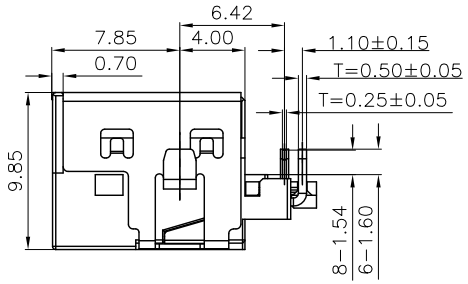

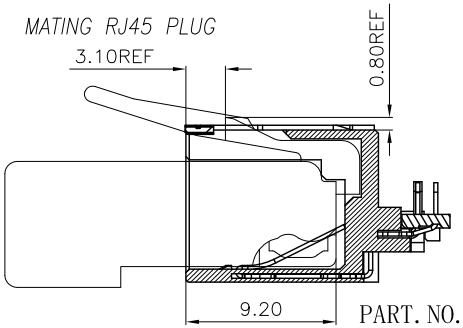

PART. NO. :
RJ15-AF12H014**

42: 功能区镀金1U″,锡脚镀雾纯锡至少100U″
43: 功能区镀金3U″,锡脚镀雾纯锡至少100U″
44: 功能区镀金5U″,锡脚镀雾纯锡至少100U″
45: 功能区镀金10U″,锡脚镀雾纯锡至少100U″
46: 功能区镀金15U″,锡脚镀雾纯锡至少100U″
47: 功能区镀金30U″,锡脚镀雾纯锡至少100U″

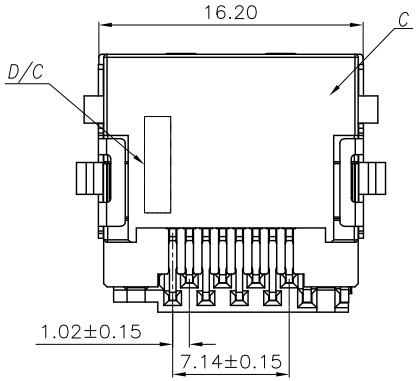

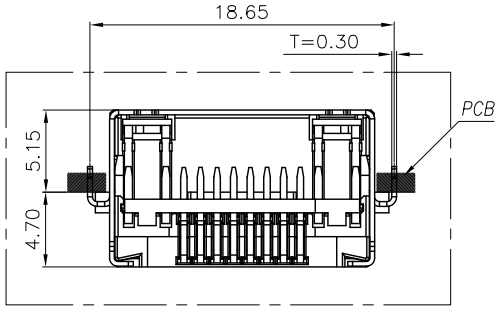

LED ELECTRICAL CHARACTERISTIC

NODE	COLOR	SYMBOL	WAVELENGTE	FORWARD CURRENT	FORWARD VOLTAGE
B2(-) B1(+)	YELLOW	B2 ▷| B1	585-597nm	If=20mA	1.7-2.7V
A2(+) A1(-)	GREEN	A2 ▷| A1	565-574nm	If=20mA	1.7-2.7V
A2(-) A1(+)	ORANGE	A1 ▷| A2	600-612nm	If=20mA	1.7-2.7V

NO	DESCRIPTION	QTY	MATERIAL	PLATING & COLOR
H	STOP-B	1	LCP UL 94V-0	BLACK
G	STOP-A	1	LCP UL 94V-0	BLACK
F	CAP	1	LCP UL 94V-0	BLACK
E	LED	1	YELLOW	TIN
D	LED	1	ORANGE/GREEN	TIN
C	SHELL	1	SPCC	50u" NICKEL PLATED
B	CONTACT	8	C5210R-EH	SEE PART NO.
A	HOUSING	1	LCP UL 94V-0	BLACK

GENERAL TOLERANCE		DWG. NO.	RJ15-AF12H01400	PART. NO.	RJ15-AF12H014**	DRAWN	YUAN 2019.04.07	UNIT	mm	SCALE	1:1
x.±0.50	x.°± 5°	REV.	A	TITLE	RJ45(反向) H4.70 12P Conn.	CHECKED					
.x±0.25	.x°± 2°	SIZE		SHEET	1 OF 1	APPROVED					
.xx±0.15	.xx°± 1°	A4									

OLN® 东莞市欧联电子科技有限公司
DONGGUAN OLN ELECTRONICS TECHNOLOGY CO., LTD.